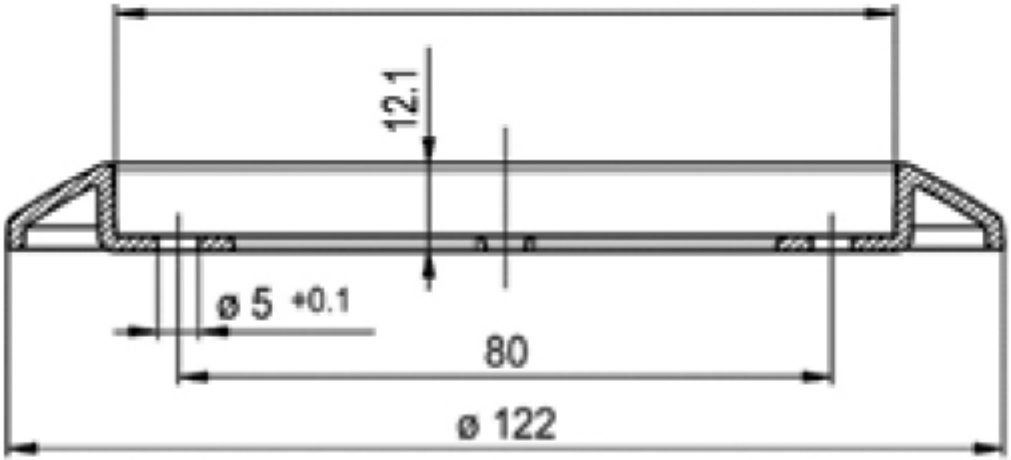
12.1
ø 5 +0.1
80
ø 122

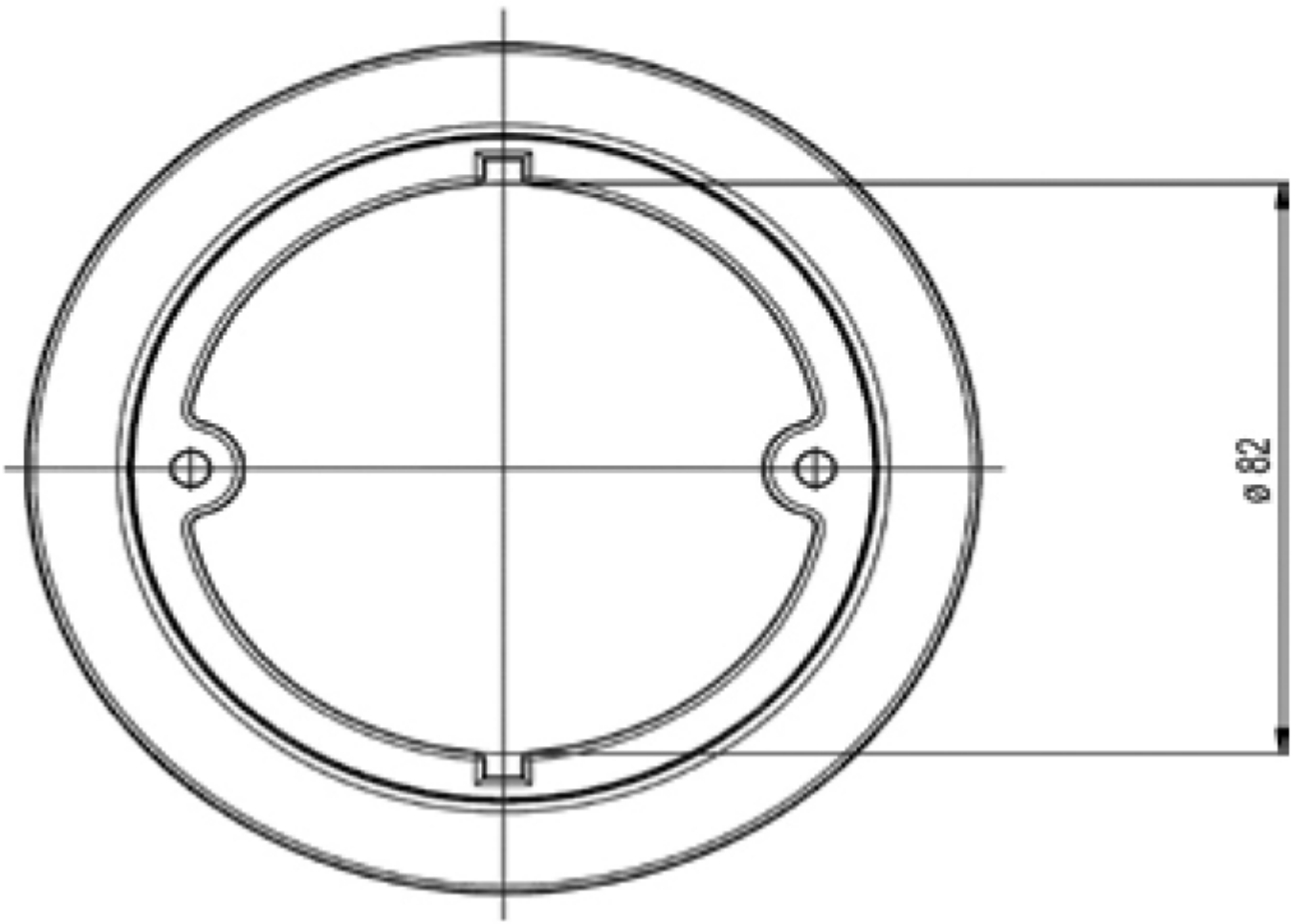
ø 82