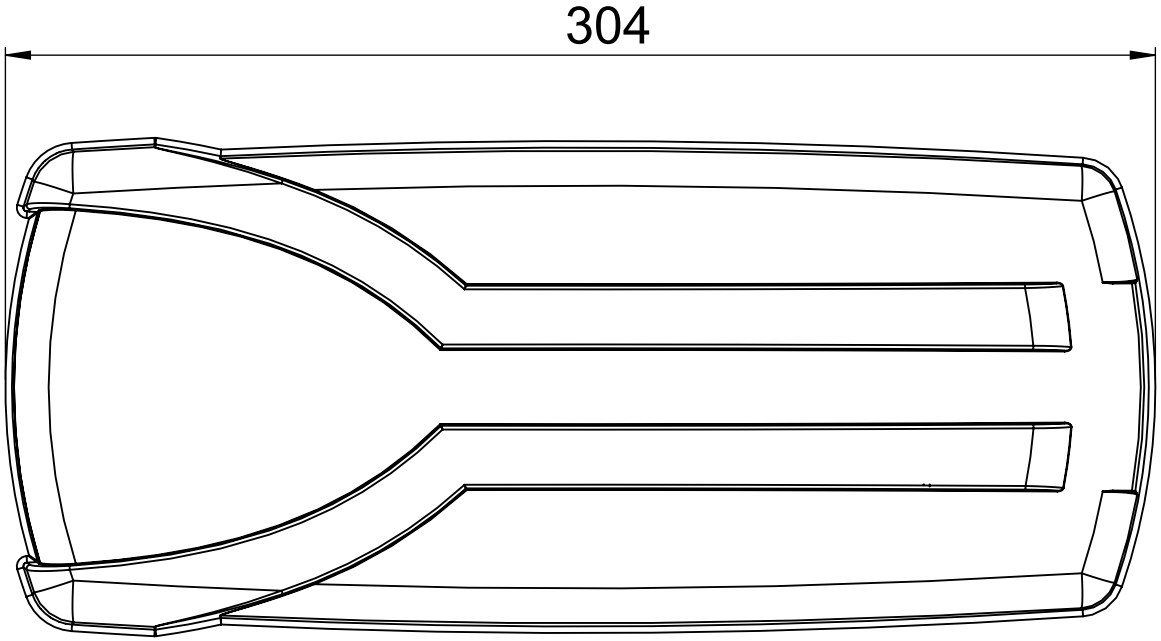
304

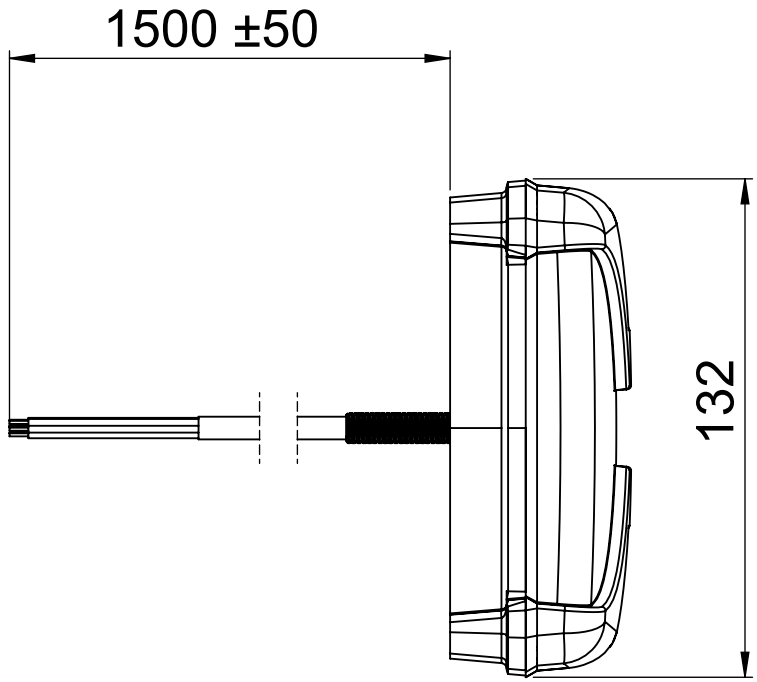
1500 ±50
132

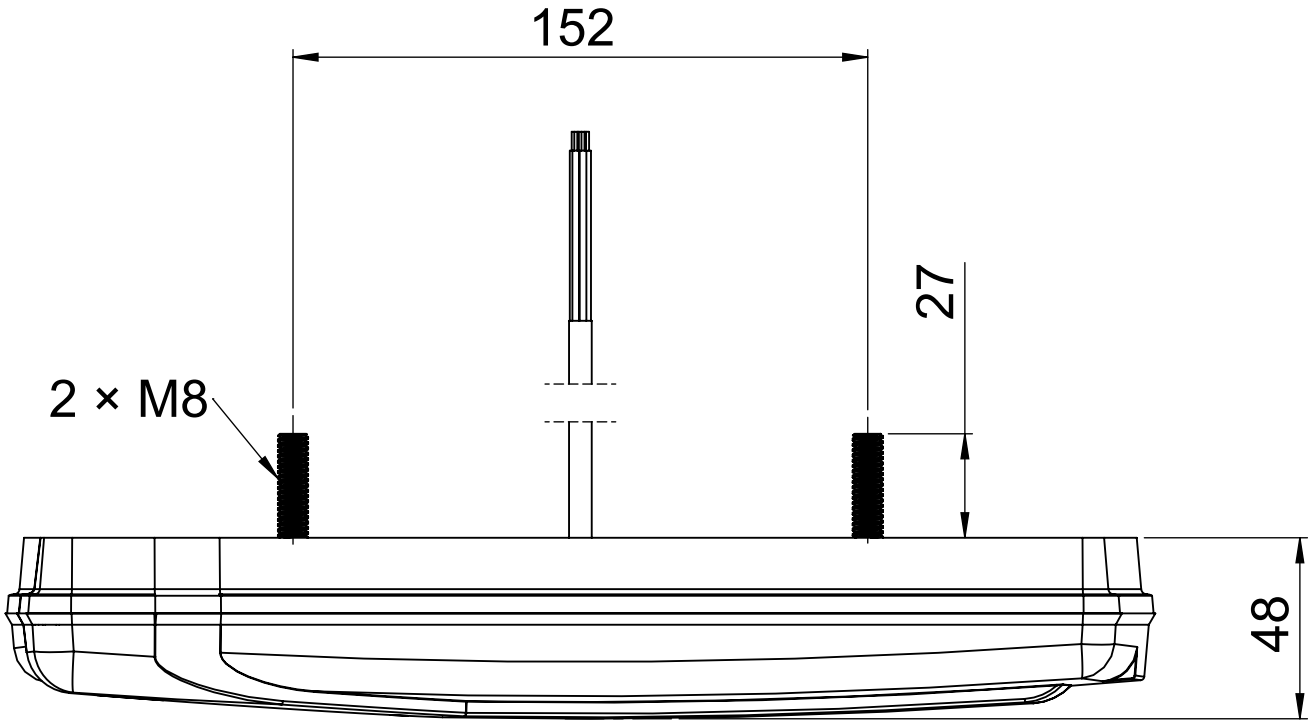
152
27
2 × M8
48