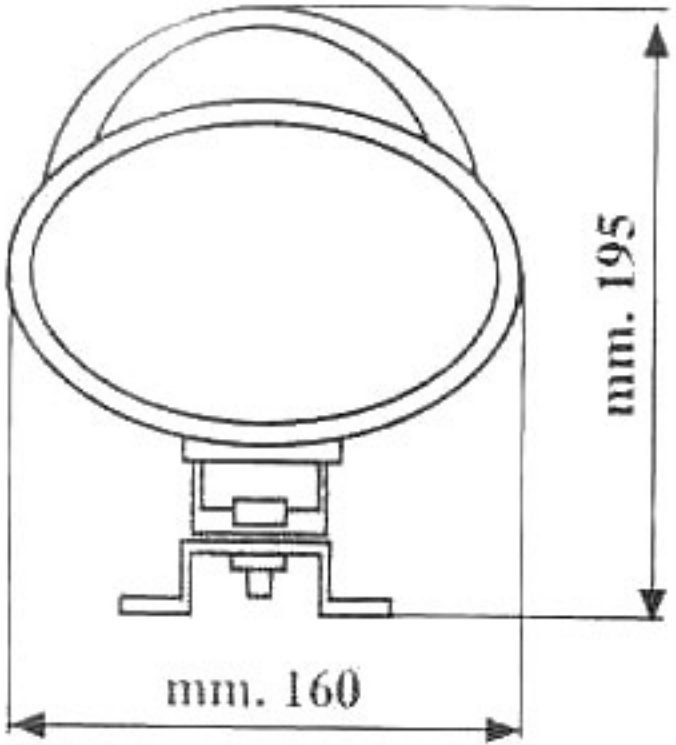
mm. 195
mm. 160

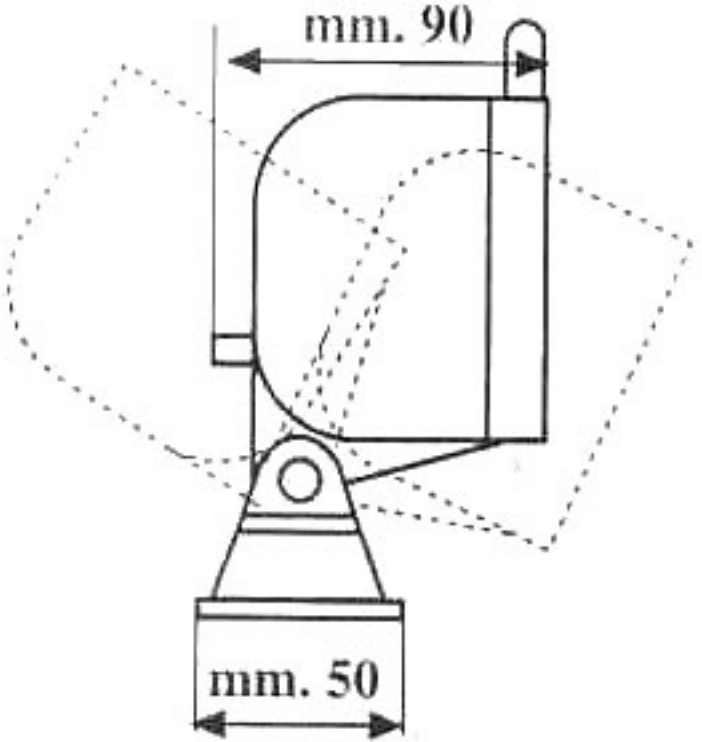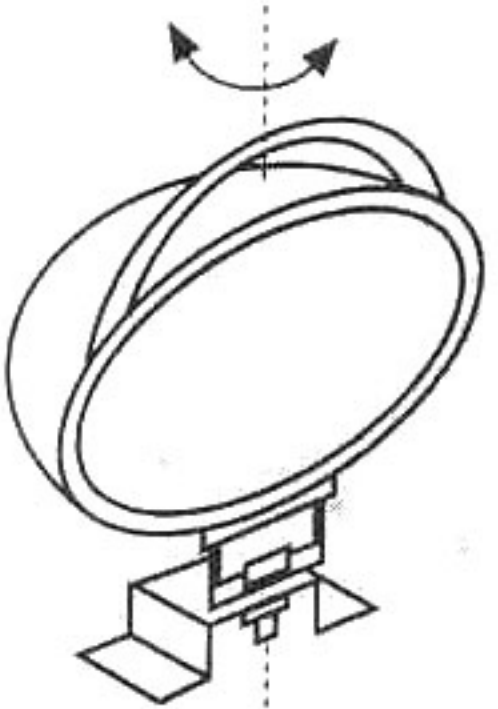
mm. 90
mm. 50